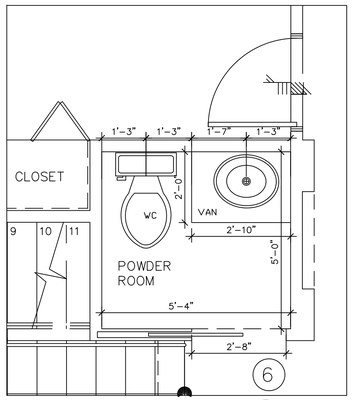

PWDR ROOM DET 1

SCALE: 1/2" = 1"

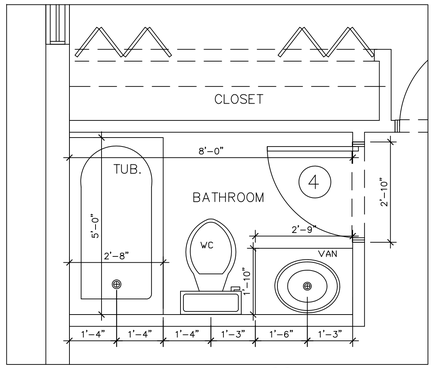

PWDR ROOM DET 3

SCALE: 1/2" = 1"

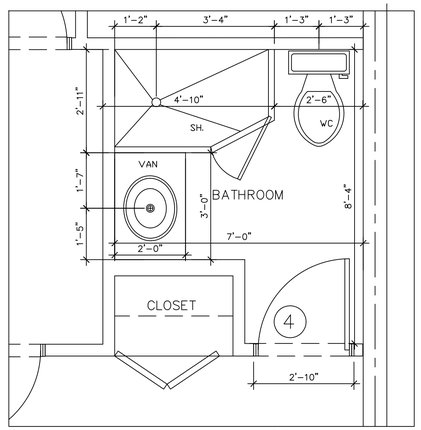

PWDR ROOM DET 4

SCALE: 1/2" = 1"

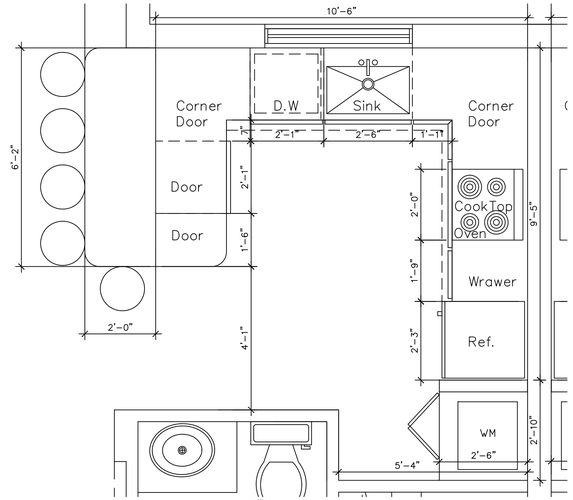

KITCHEN DET 8

SCALE: 1/2" = 1"

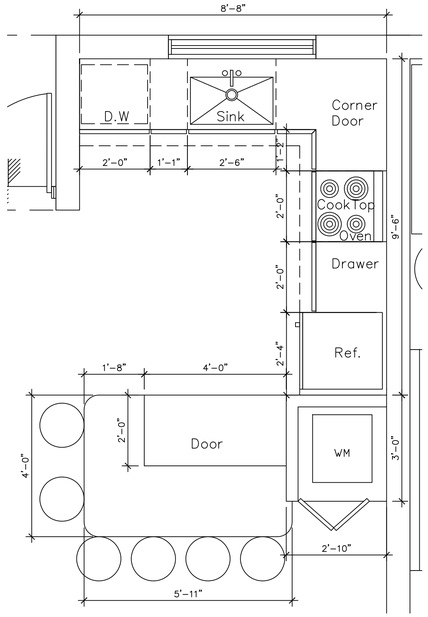

KITCHEN DET 7

SCALE: 1/2" = 1"

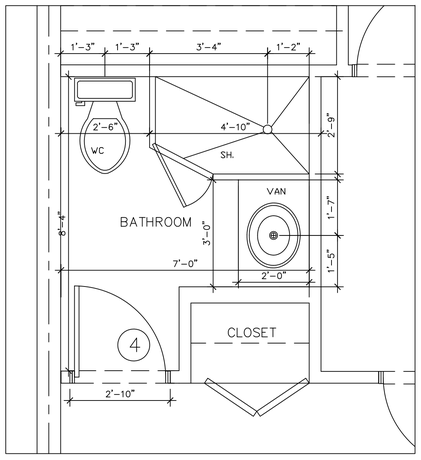

PWDR ROOM DET 5

SCALE: 1/2" = 1"

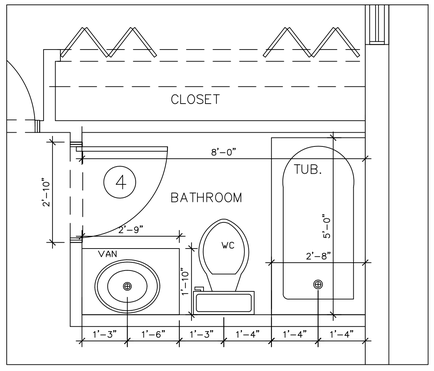

PWDR ROOM DET 6

SCALE: 1/2" = 1"

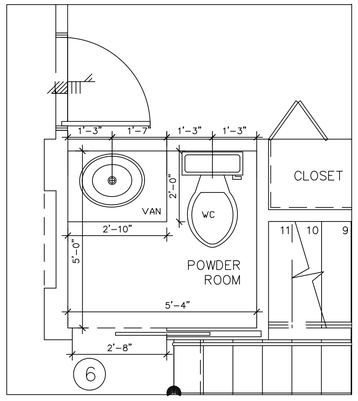

PWDR ROOM DET 2

SCALE: 1/2" = 1"

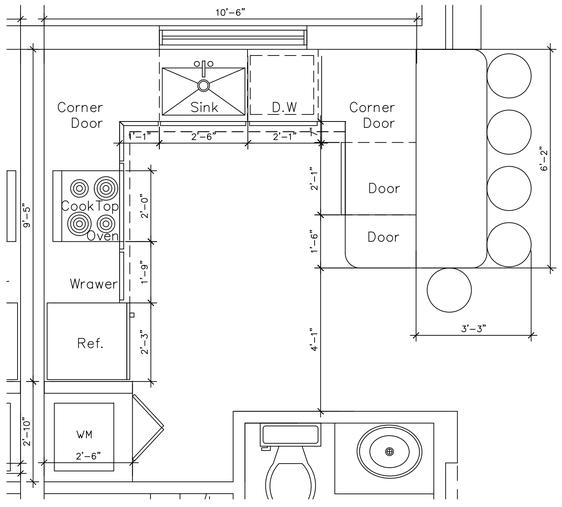

KITCHEN DET 9

SCALE: 1/2" = 1"

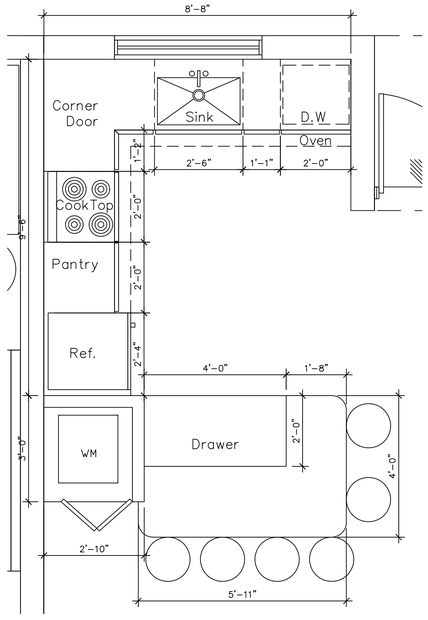

KITCHEN DET 10

SCALE: 1/2" = 1"

Revisions

02.01.19 1ST ISSUE

PROPOSED NEW BLDG#1 (6 UNIT APT COMPLEX)

THE VILLAGES AT MIAMI GARDENS

3400 NW 191 ST.

MIAMI GARDENS, FL. 33056-2936

JCD ARCHITECT, Inc.

JUAN C. DAVID R.A. #0015344

Design & Development

LEED ACCREDITED PROFESSIONAL

Architecture Interiors Planning Construction

1385 Coral Way, Suite 404 • Miami, Florida 33145 • Phone: (305) 285-4343 • Fax: (305) 285-4330

Job No.

Date

Scale SHOWN

Digitally signed by Juan C David DN: c=US, o=JCD Architect Inc, ou=A01427E00001677FD75660000030D5, cn=Juan C David Date: 2019.08.28 10:44:30 -04'00'

Seal

AA-26001560

Sheet No.

A-400

Designs are subject to change as required by actual measurements, standard industry practices in light of existing structural and other conditions, applicable bldg. codes, and the like. These plans are and shall remain the property of Mr.David and shall not be sold or reproduced without its prior written consent. Mr.David shall be notified of any changes rec'd by actual measurements, etc. as aforesaid prior to submission of any phase for bid or construction.

Miami Dade County Department of Regulatory And Economic Resources - Job Copy
3419015712 - 11/14/2019 12:20:47 PM
A-400 08202019.pdf