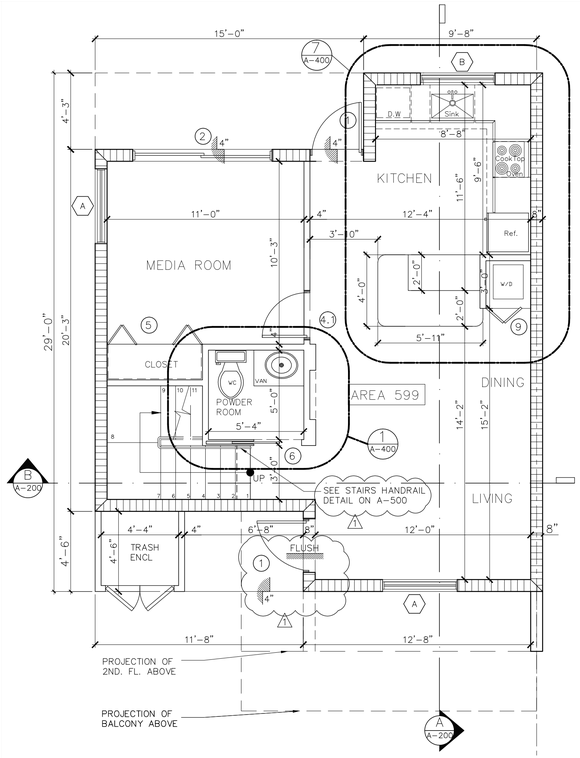

GROUND FLOOR PLAN - CORNER UNIT "1"

SCALE: 1/4" = 1"

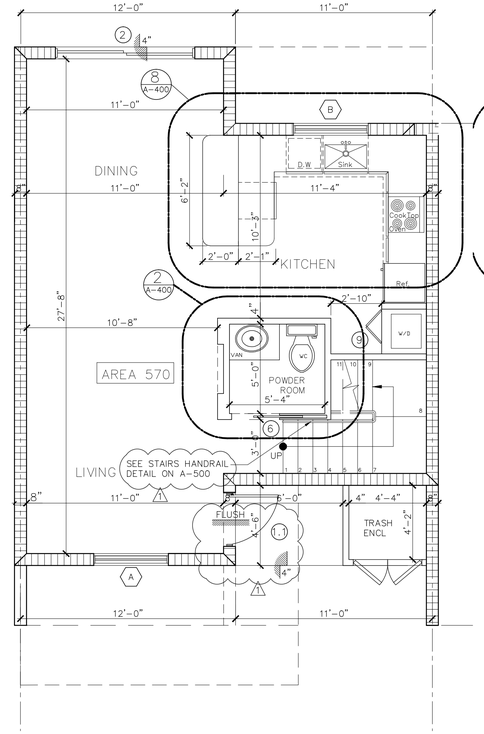

GROUND FLOOR PLAN - UNIT "2,4,6"

SCALE: 1/4" = 1"

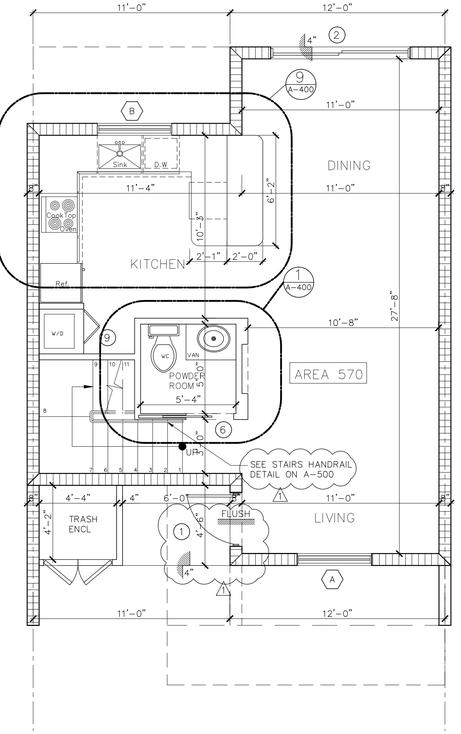

GROUND FLOOR PLAN - UNIT "3,5,7"

SCALE: 1/4" = 1"

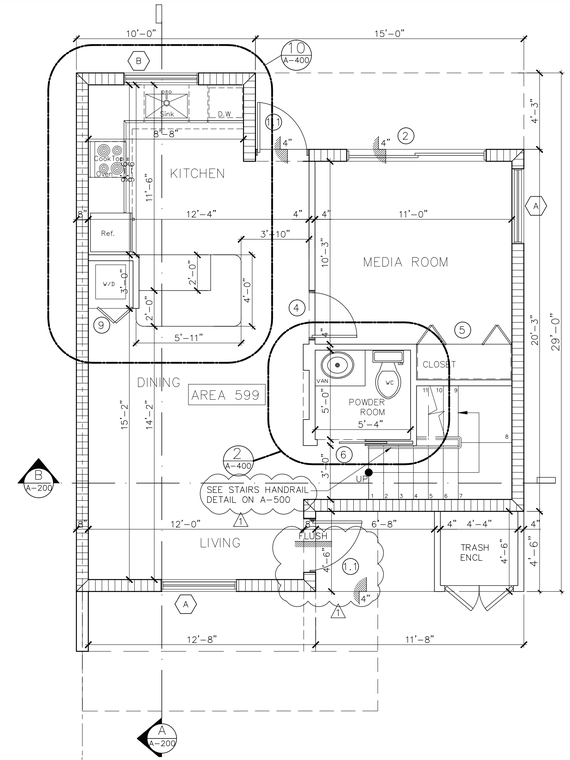

GROUND FLOOR PLAN - CORNER UNIT "8"

SCALE: 1/4" = 1"

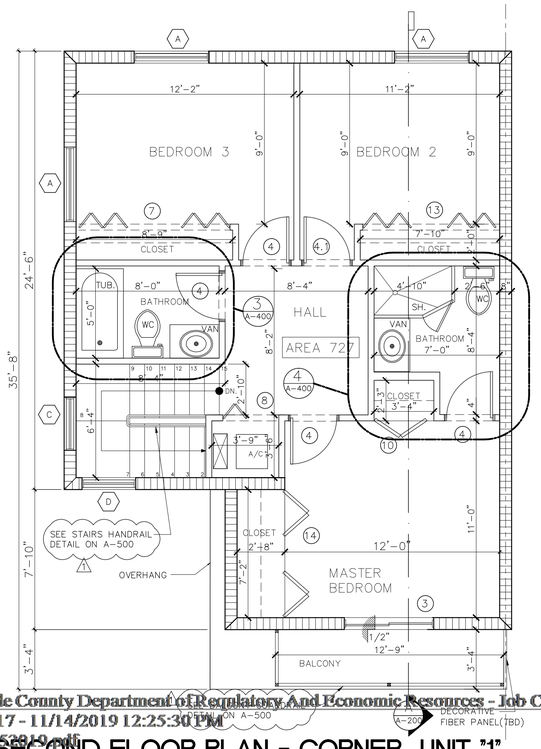

SECOND FLOOR PLAN - CORNER UNIT "1"

SCALE: 1/4" = 1"

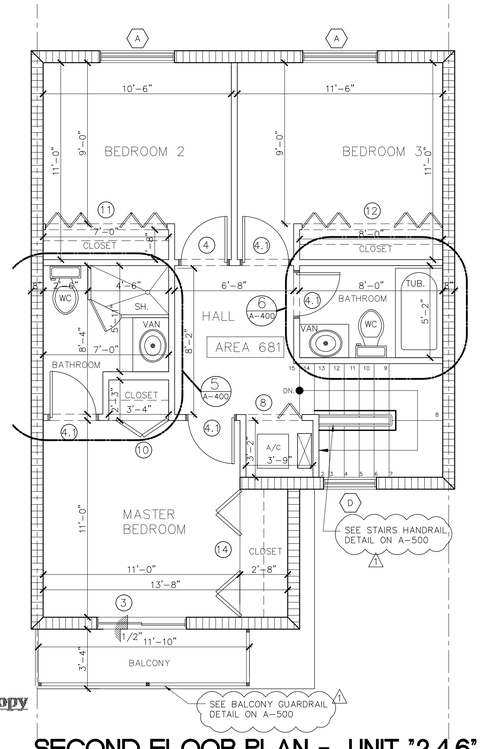

SECOND FLOOR PLAN - UNIT "2,4,6"

SCALE: 1/4" = 1"

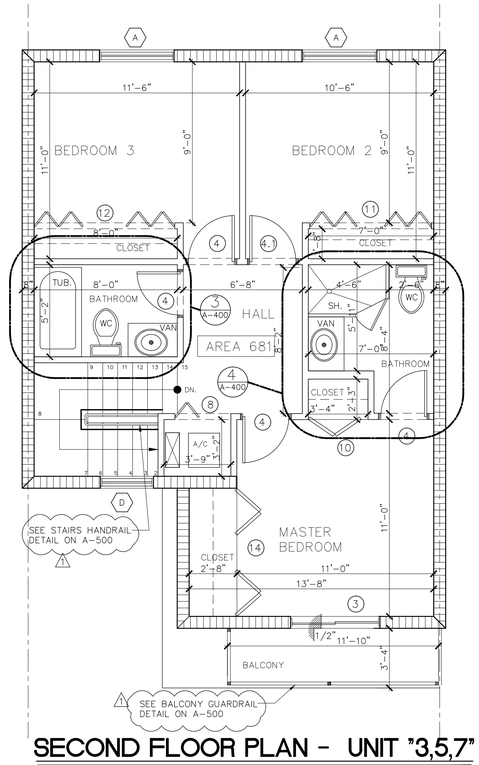

SECOND FLOOR PLAN - UNIT "3,5,7"

SCALE: 1/4" = 1"

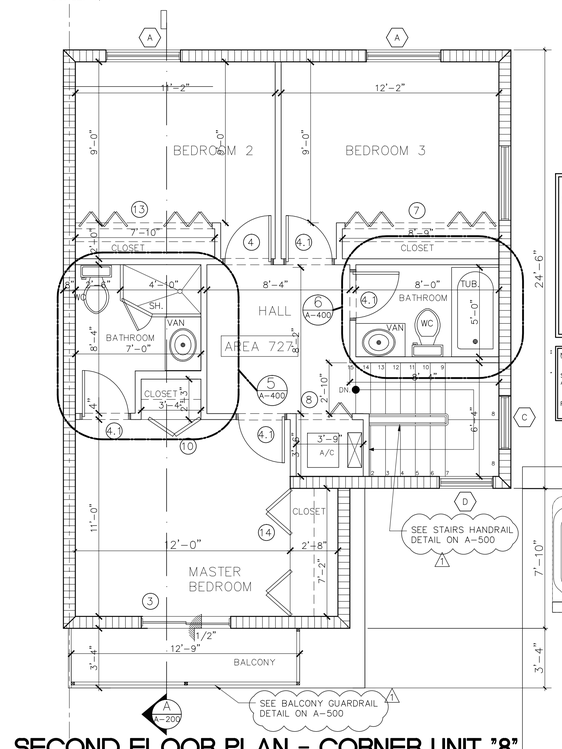

SECOND FLOOR PLAN - CORNER UNIT "8"

SCALE: 1/4" = 1"

NEW CONSTRUCTION LEGEND:

- NEW MASONRY WALL: 8"or 10" CONC. BLOCK W/5/8" STUCCO (EXT.) AND 1/2" GYP. WALL BD. OVER 1X2 P.T. FURRING AND R-4.1 INSUL. BTW.
- NEW PARTITION: 1- 5/8"X 3- 5/8" & .5- 5/8" MTL. ST. FRAME PARTITION 24" O.C. W/1/2" GYPSUM BOARD EACH SIDE W/ TYPE "S" DRYWALL SCREW 8" O.C. @ PERIM. 12" @ FIELD. NOTE: MAX 16 O.C., MIN 20 GA, AT WALL HUNG ITEMS.
- NEW DOOR. SEE SCHDULE FOR DIM.

NOTE:

- STAIRS AND RAILINGS, INTERIOR AND EXTERIOR, SHALL HAVE S&S SHOP DRAWINGS PRESENTED FOR APPROVAL TO CLIENT AND CITY UNDER SEPARATE PERMIT.
- SHOP DWG REQ'D FOR: ROOF, W & DOORS C.U STANDS, PRE CAST CONC. FLOOR & ROOF SLAB
- FOR INDIV. UNIT PLAN SEE A-104

KEY PLAN BUILDING #3

SCALE: N.T.S.

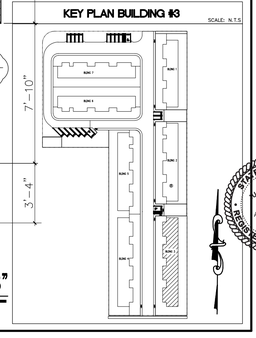

Miami Dade County Department of Regulatory And Economic Resources - Job Copy
3419015717 - 11/14/2019 12:25:30 PM
A-104 09252019.pdf
Examiner Date/Time Stamp Disp. Trade Stamp Name
Ron Bennett 11/13/2019 9:09:05 AMA FIRE Approved

Revisions

- 02.01.19 1ST ISSUE
- 08.27.19 CITY COMM

PROPOSED NEW BLDG#3 (8 UNIT APT COMPLEX)

THE VILLAGES AT MIAMI GARDENS
3400 NW 191 ST.
MIAMI GARDENS, FL. 33056-2936

JCD ARCHITECT, Inc.
JUAN C. DAVID R.A. #0015344
Design & Development
LEED ACCREDITED PROFESSIONAL
Architecture Interiors Planning Construction
1385 Coral Way, Suite 404 ▪ Miami, Florida 33145 ▪ Phone: (305) 285-4343 ▪ Fax: (305) 285-4330

Designs, ideas, and specifications herein are the property of the Architect and shall not be sold or reproduced without his prior written consent. Mr.David shall be notified of any changes req'd by actual measurements, etc. as aforesaid prior to submission of any phase for bid or construction. Contractor shall be responsible for all dimensions, standard industry practices in light of existing structural and other conditions, applicable bldg. codes, and the like. These plans are and shall remain the property of Mr.David and shall not be sold or reproduced without his prior written consent. Mr.David shall be notified of any changes req'd by actual measurements, etc. as aforesaid prior to submission of any phase for bid or construction.

Job No.

Date

Scale SIDENOTE

Digitally signed by Juan C David
DN: c=US, o=JCD Architect Inc, ou=A01427E000001677FD7566C000030D5, cn=Juan C David
Date: 2020.09.20 12:45:29 -04'00'

STATE OF FLORIDA · JUAN C. DAVID · A-0015344 · REGISTERED ARCHITECT

AA-26001500

Sheet No. A-104