PANEL "H-1"

TYPE: LOAD CENTER
SERVICE: 1ø, 3W
VOLTAGE: 120/240 V
MOUNTING/LOCATION: SURFACE

MAIN BUS: 125 A
NEUTRAL: 125 A
MAIN: 100 A MCB
AICS: 42 000

AMPS	POLES	TOTAL V.A.	COND. SIZE	WIRE SIZE	REMARKS	CKT NO.		CKT NO.	REMARKS	WIRE SIZE	COND. SIZE	TOTAL V.A.	POLES	AMPS
20	2	1264	3/4	10	PARKING LIGHTS	1	A	2	SIGN	10	3/4	1200	1	20
						3	B	4	COURTESY LIGHTS	10	3/4	260	1	20
30	1	4080	3/4	10	IRRIGATION PUMP	5	A	6	RECEPTACLES	10	3/4	720	1	20
						7	B	8	OUTLETS (BLDG#2)	10	3/4	280	1	20
20	1	360	3/4	10	FACP(BLDG#5)	9	A	10	OUTLETS (BLDG#5)	10	3/4	280	1	20
20	1	360	3/4	10	FACP(BLDG#2)	11	B	12	SPACE	–	–	–	–	–

CONNECTED LOAD: 8804 VA

CONT LOAD (LIGHTING)---------- 2724 VA
25% OF CONT. LOAD---------- 681 VA
REMAINDER @ 100%----------6080 VA
TOTAL DEMAND LOAD---------- 9485 VA
AT 240/1/60 ---------- 39 AMP

PROVIDE 100 AMP MAIN BREAKER ON THIS PANEL

FEEDER: SEE RISER
FED FROM: SEE RISER

*** ELECTRICAL CONTRACTOR SHALL VERIFY THE EXACT NAME PLATE RATING OF THE MOTORS & HEATERS BEFORE INSTALLATION AND INFORM TO THE ELECTRICAL ENGINEER OF ANY DISCREPANCE

PANEL "H-2"

TYPE: LOAD CENTER
SERVICE: 1ø, 3W
VOLTAGE: 120/240 V
MOUNTING/LOCATION: SURFACE

MAIN BUS: 125 A
NEUTRAL: 125 A
MAIN: 100 A MCB
AICS: 42 000

AMPS	POLES	TOTAL V.A.	COND. SIZE	WIRE SIZE	REMARKS	CKT NO.		CKT NO.	REMARKS	WIRE SIZE	COND. SIZE	TOTAL V.A.	POLES	AMPS
20	2	1264	3/4	10	PARKING LIGHTS	1	A	2	COURTESY LIGHTS	10	3/4	360	1	20
						3	B	4	RECEPTACLES	10	3/4	360	1	20
20	1	360	3/4	10	FACP(BLDG#5)	5	A	6	OUTLETS (BLDG#6)	10	3/4	280	1	20
–	–	–	–	–	SPACE	7	B	8	SPACE	–	–	–	–	–
–	–	–	–	–	SPACE	9	A	10	SPACE	–	–	–	–	–
–	–	–	–	–	SPACE	11	B	12	SPACE	–	–	–	–	–

CONNECTED LOAD: 2624 VA

CONT LOAD (LIGHTING)---------- 1624 VA
25% OF CONT. LOAD---------- 406 VA
REMAINDER @ 100%---------- 1000 VA
TOTAL DEMAND LOAD---------- 3030 VA
AT 240/1/60 ---------- 13 AMP

PROVIDE 100 AMP MAIN BREAKER ON THIS PANEL

FEEDER: SEE RISER
FED FROM: SEE RISER

*** ELECTRICAL CONTRACTOR SHALL VERIFY THE EXACT NAME PLATE RATING OF THE MOTORS & HEATERS BEFORE INSTALLATION AND INFORM TO THE ELECTRICAL ENGINEER OF ANY DISCREPANCE

PANEL "H-3"

TYPE: LOAD CENTER
SERVICE: 1ø, 3W
VOLTAGE: 120/240 V
MOUNTING/LOCATION: SURFACE

MAIN BUS: 125 A
NEUTRAL: 125 A
MAIN: 100 A MCB
AICS: 42 000

AMPS	POLES	TOTAL V.A.	COND. SIZE	WIRE SIZE	REMARKS	CKT NO.		CKT NO.	REMARKS	WIRE SIZE	COND. SIZE	TOTAL V.A.	POLES	AMPS
20	2	1580	3/4	10	PARKING LIGHTS	1	A	2	SIGN	10	3/4	1200	1	20
						3	B	4	COURTESY LIGHTS	10	3/4	340	1	20
20	1	360	3/4	10	FACP(BLDG#1)	5	A	6	RECEPTACLES	10	3/4	360	1	20
20	1	280	3/4	10	OUTLETS (BLDG#1)	7	B	8	SPACE			–	–	–
–	–	–	–	–	SPACE	9	A	10	SPACE	–	–	–	–	–
–	–	–	–	–	SPACE	11	B	12	SPACE	–	–	–	–	–

CONNECTED LOAD: 3480 VA

CONT LOAD (LIGHTING)---------- 3120 VA
25% OF CONT. LOAD---------- 780 VA
REMAINDER @ 100%---------- 1000 VA
TOTAL DEMAND LOAD---------- 4900 VA
AT 240/1/60 ---------- 20 AMP

PROVIDE 100 AMP MAIN BREAKER ON THIS PANEL

FEEDER: SEE RISER
FED FROM: SEE RISER

*** ELECTRICAL CONTRACTOR SHALL VERIFY THE EXACT NAME PLATE RATING OF THE MOTORS & HEATERS BEFORE INSTALLATION AND INFORM TO THE ELECTRICAL ENGINEER OF ANY DISCREPANCE

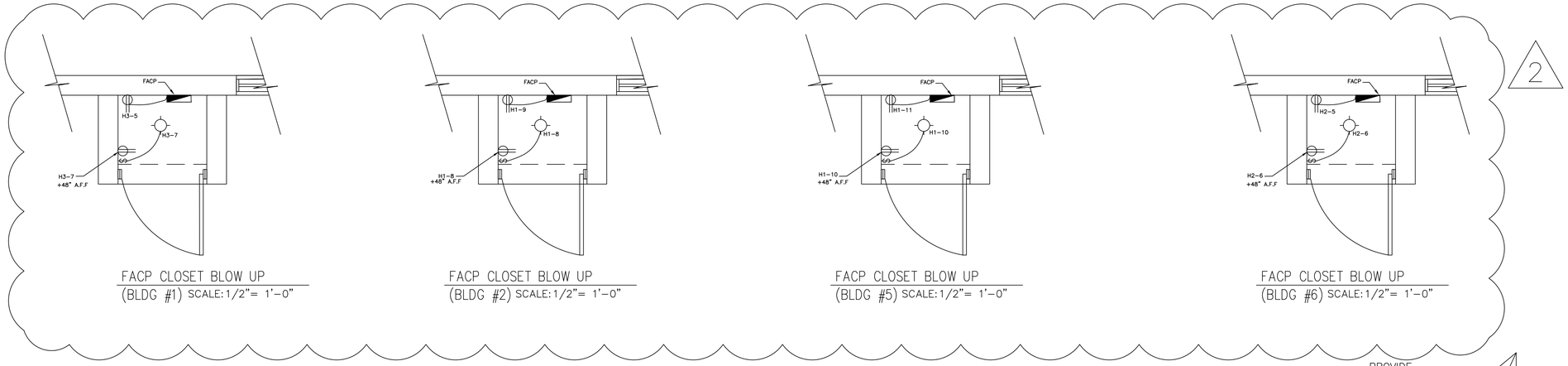

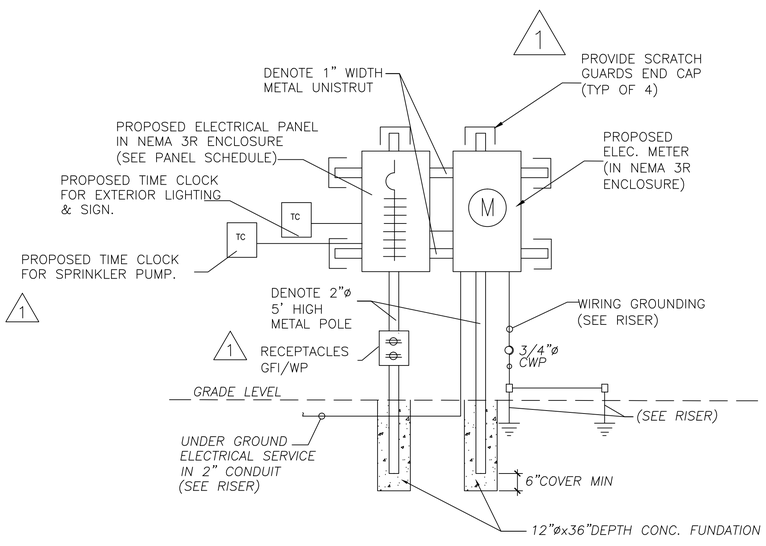

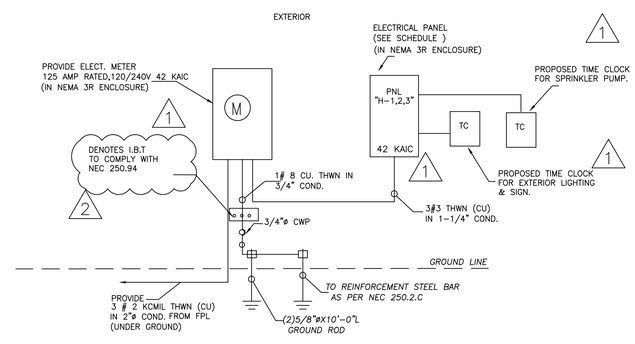

ELECTRICAL RISER DIAGRAM
TYP PANELS H-1,H-2,H-3 N.T.S.

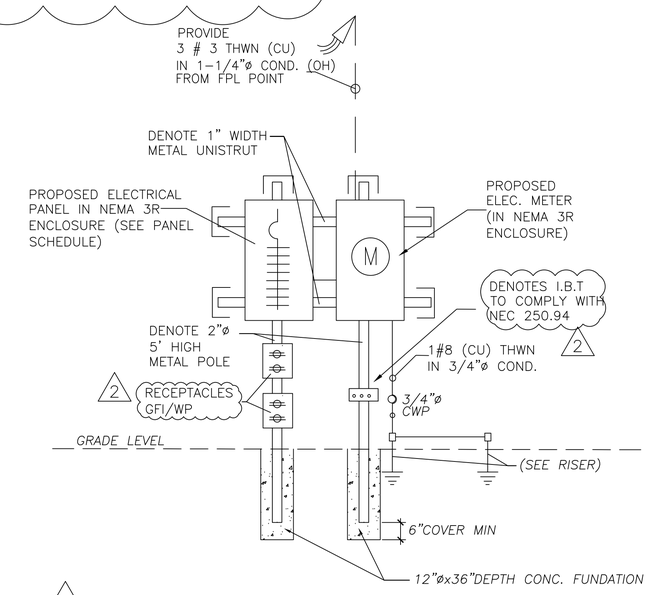

TEMPORARY ELECTRICAL SERVICE RISER
N.T.S.

STAND MOUNTING DETAIL
TYP PANELS H-1,H-2,H-3 N.T.S.

ELECTRICAL PANELS & RISERS (COMMON AREAS)
N.T.S

Miami Dade County Department of Regulatory And Economic Resources - Job Copy
3419015913 - 11/14/2019 12:30:45 PM
E-0.1 10312019.pdf
Examiner Date Time Stamp Disp. Trade Stamp Name
Ron Bennett 11/13/2019 9:36:51 AMA FIRE Approved

Revisions
1 02.01.19 1ST ISSUE
1 08.23.19 B.D.C
2 10.28.19 B.D.C

PROPOSED NEW BLDG #5 (7 UNITS)
THE VILLAGES AT MIAMI GARDENS
3400 NW 191st STREET
MIAMI GARDENS, FL. 33056-2936

JCD ARCHITECT, Inc.
JUAN C. DAVID R.A. # 0015344
Design & Development
LEED ACCREDITED PROFESSIONAL
Architecture Interiors Planning Construction
1385 Coral Way, Suite 404 ▫ Miami, Florida 33145 ▫ Phone: (305) 285-4343 ▫ Fax: (305) 285-4330

Job No.
Date
Scale SHOWN
Seal
Digitally signed by Juan C David
DN: c=US, o=JCD Architect Inc, ou=A01427E00001677FD7566C000030D5, cn=Juan C David
Date: 2019.10.31 12:08:04 -04'00'
AA-26001560
Sheet No.
E-0.1